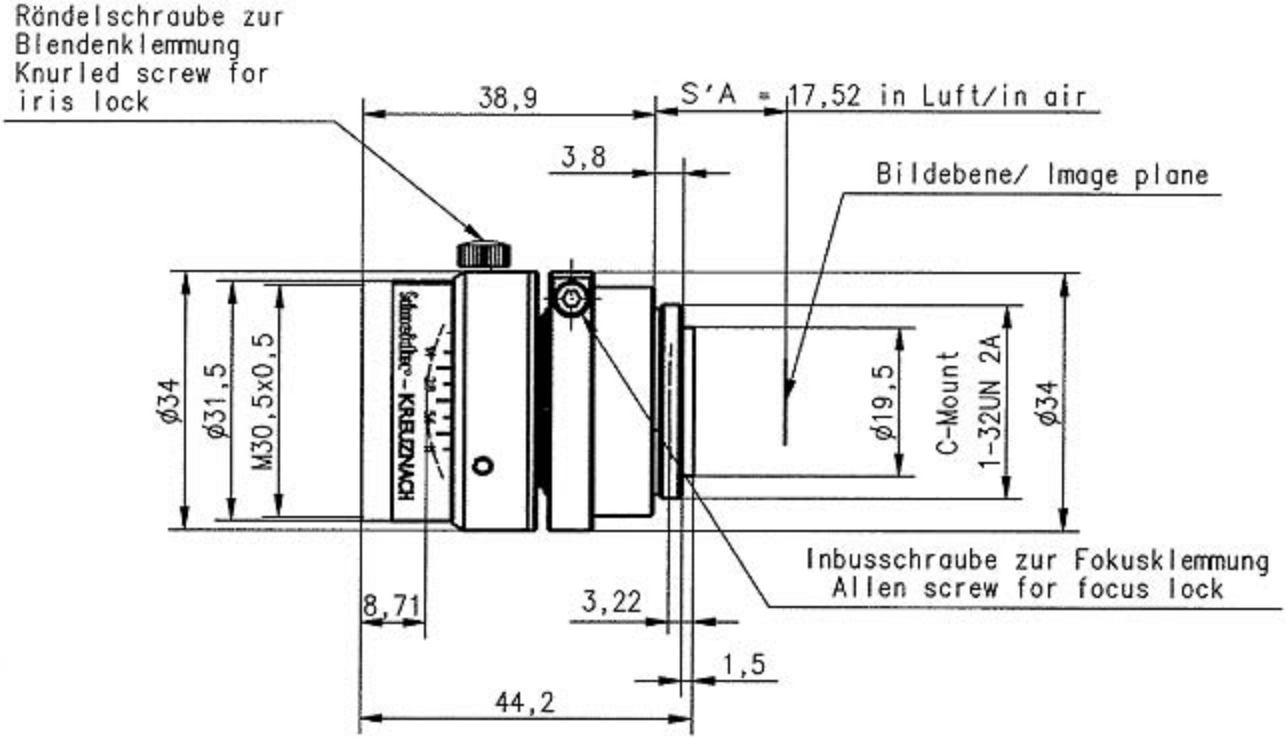

APO-XENOPLAN 1.4/23-0903